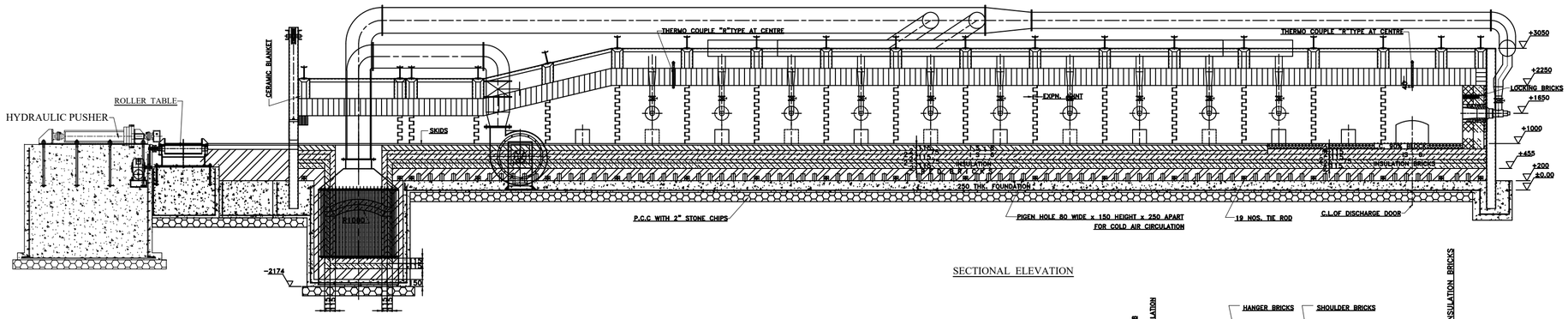

SECTIONAL ELEVATION

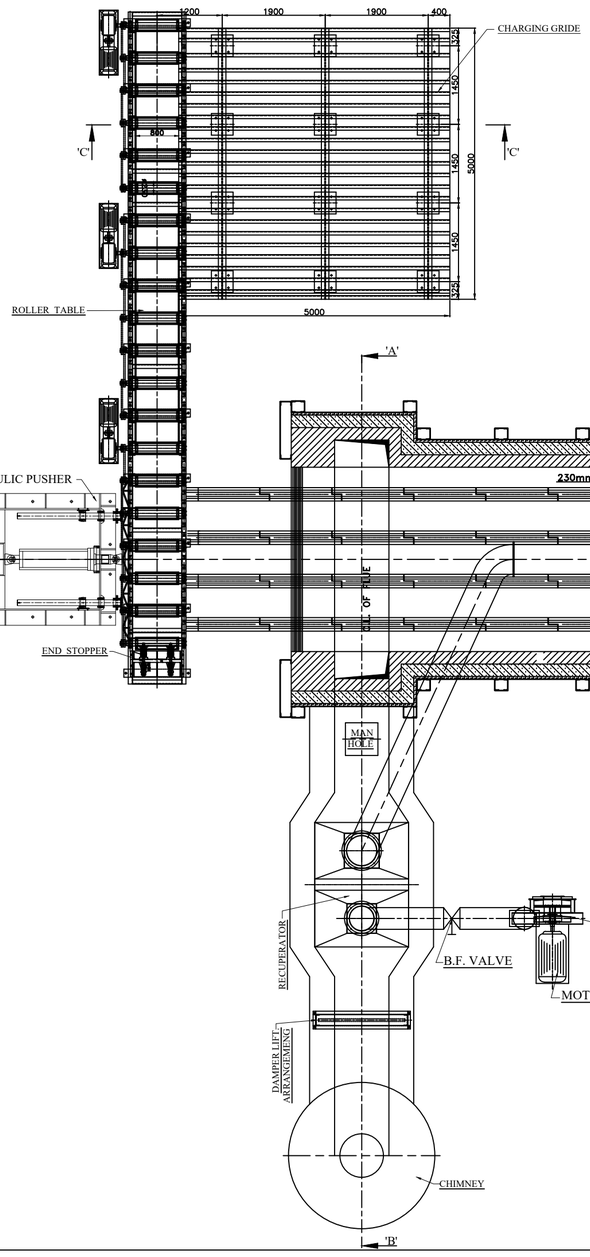

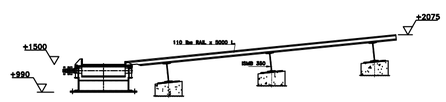

SECTION C-C

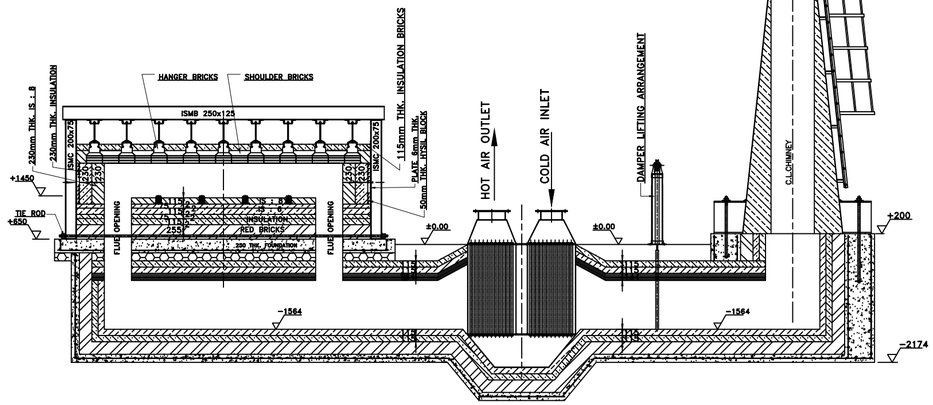

SECTION 'A-A'

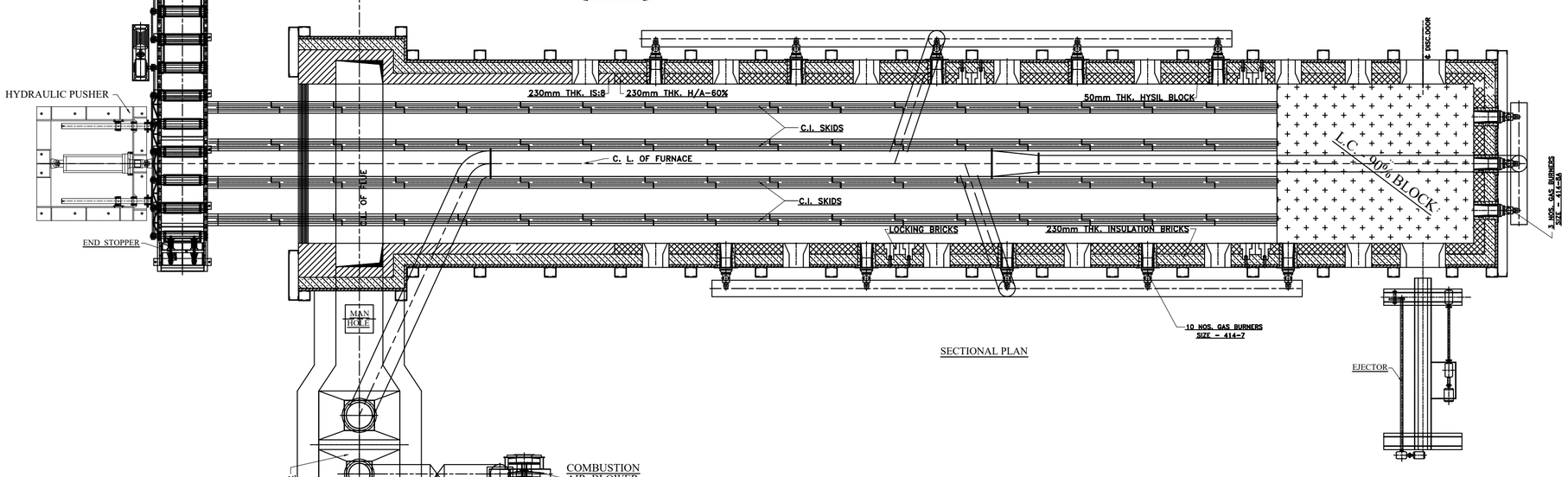

SECTIONAL PLAN

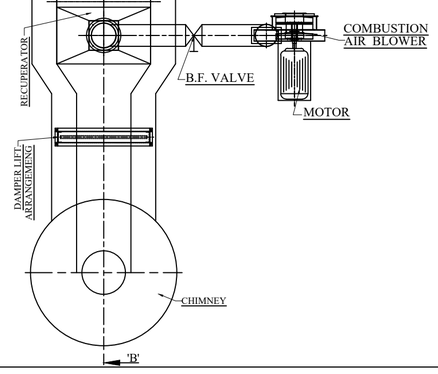

BILLET RE-HEATING FURNACE 20 TON